A Connection-based Characterization of Bi-intuitionistic Validity

Didier Galmiche and Daniel Méry

LORIA - Université Henri Poincaré
Campus Scientifique BP 239
Vandœuvre-lès-Nancy, France

Abstract. We give a connection-based characterization of validity in propositional bi-intuitionistic logic in terms of specific directed graphs called R-graphs. Such a characterization is well-suited for deriving labelled proof-systems with counter-model construction facilities. We first define the notion of bi-intuitionistic R-graph from which we then obtain a connection-based characterization of propositional bi-intuitionistic validity and derive a sound and complete free-variable labelled sequent calculus that admits cut-elimination and also variable splitting.

1 Introduction

Bi-intuitionistic logic BiInt is a conservative extension of intuitionistic logic that introduces a new connective $\prec$, called exclusion (also called co-implication or subtraction), which is dual to the implication connective $\rightarrow$. It was first studied by Rauszer that gives a Hilbert calculus with Kripke and algebraic semantics [11] and more recently by Crolard from the perspective of bicartesian closed categories with coexponents and the underlying type system with applications to type theory [2,3]. An interesting aspect of BiInt lies in the duality between implication and exclusion which motivates the definition of proof systems that work as programming languages in which values and continuations are handled in a symmetric way. From a proof-theoretic point of view, a strong focus has been put on the achievement of cut-free proof-systems since cut-elimination in Gentzen-style (shallow) sequent calculi is particularly difficult to obtain. In this perspective some cut-free calculi for BiInt have been proposed from sequent structures like nested sequents [6] or display inference rules [10]. Another solution makes use of Negri's general methodology for designing labelled sequent calculi in modal logics [7] in order to provide a cut-free labelled sequent calculus where labels correspond to worlds in Kripke structures [9].

In this paper we give the first connection-based characterization of propositional bi-intuitionistic validity in terms of bi-intuitionistic R-graphs. Let us note that similar structures have been defined in the case of BI or separation logics [5,4] in order to characterize validity. Our characterization is well-suited for deriving labelled proof-systems with counter-model construction facilities which, compared with the existing labelled proof-systems [9], easily integrate

free-variables and variable splitting [1]. The main contributions of this work are: the definition of bi-intuitionistic R-graphs; a connection-based characterization of validity in propositional BiInt; a new sound and complete free-variable labelled sequent calculus that includes variable splitting and has the cut-elimination property; an algorithm for solving admissibility constraints and thus deriving a connection-based method.

2 Bi-intuitionistic Propositional Logic

The language of BiInt consists of a countable set $\mathcal{V}$ of propositional letters $\mathrm{P}, \mathrm{Q} \ldots$ and the logical symbols $\bot$, $\vee$, $\wedge$, $\rightarrow$ and $\prec$. Formulas are inductively built from propositional letters as follows:

$$\mathrm{A} ::= \mathrm{P} \mid \bot \mid \mathrm{A} \vee \mathrm{A} \mid \mathrm{A} \wedge \mathrm{A} \mid \mathrm{A} \rightarrow \mathrm{A} \mid \mathrm{A} \prec \mathrm{A}$$

. We write $\mathcal{F}$ to denote the set of all formulas of BiInt. Negation $\neg\mathrm{A}$ is defined as syntactic sugar for $\mathrm{A} \rightarrow \bot$ and is therefore not considered as primitive in our setting. Similarly, the conjunctive unit $\top$ is defined as a shorthand for $\mathrm{P} \rightarrow \mathrm{P}$. Bi-intuitionistic logic Kripke semantics is a straightforward extension of that of intuitionistic logic.

Definition 1. *A* Kripke model *is a triple* $\mathcal{M} = \langle M, \sqsubseteq, [\![\cdot]\!] \rangle$*, where* M *is a set of worlds,* $\sqsubseteq$ *is a partial order on* M *and* $[\![\cdot]\!]$ *is a function from worlds to sets of propositional letters satisfying the following* Kripke monotonicity *condition: if* $\mathrm{P} \in [\![m]\!]$ *and* $m \sqsubseteq n$ *then* $\mathrm{P} \in [\![n]\!]$.
The Kripke forcing relation $\models$ *is defined as the least relation between worlds and formulas such that:*

- $m \models \bot$ *never;*
- $m \models \mathrm{P}$ *iff* $\mathrm{P} \in [\![m]\!]$*;*
- $m \models \mathrm{A} \vee \mathrm{B}$ *iff* $m \models \mathrm{A}$ *or* $m \models \mathrm{B}$*;*
- $m \models \mathrm{A} \wedge \mathrm{B}$ *iff* $m \models \mathrm{A}$ *and* $m \models \mathrm{B}$*;*
- $m \models \mathrm{A} \rightarrow \mathrm{B}$ *iff for all* $n \in M$ *such that* $m \sqsubseteq n$*,* $n \not\models \mathrm{A}$ *or* $n \models \mathrm{B}$*;*
- $m \models \mathrm{A} \prec \mathrm{B}$ *iff for some* $n \in M$ *such that* $n \sqsubseteq m$*,* $n \models \mathrm{A}$ *and* $n \not\models \mathrm{B}$.

Kripke monotonicity lifts from propositional letters to formulas as in intuitionistic logic. As usual, a formula A is *satisfied in* $\mathcal{M}$ iff $m \models \mathrm{A}$ for all worlds m in M, *satisfiable* if it is satisfied in some Kripke model $\mathcal{M}$, and *valid* if it is satisfied in all Kripke models. Figure 1 depicts the standard (Dragalin-style) multi-conclusioned sequent calculus for BiInt which can be found in [9]. We observe that the rules for the exclusion connective $\prec$ simply behave as duals for the ones dealing with the inclusion $\rightarrow$. However, the price to pay for the easy dual formulation is that the calculus does not admit cut-elimination.

3 Indexing Formulas

In this section, we recall some basic terminology of connection-based characterizations of validity as we shall heavily rely on it in the forthcoming sections.

$$\frac{}{\Gamma, \bot \vdash \Delta} \qquad \frac{\Gamma \vdash \Delta}{\Gamma \vdash \bot, \Delta}\,\bot_{\mathrm{R}}$$

$$\frac{}{\Gamma, \mathrm{A} \vdash \mathrm{A}, \Delta}\,\mathrm{ax} \qquad \frac{\Gamma \vdash \mathrm{A}, \Delta \quad \Gamma, \mathrm{A} \vdash \Delta}{\Gamma \vdash \Delta}\,\mathrm{cut}$$

$$\frac{\Gamma, \mathrm{A}, \mathrm{B} \vdash \Delta}{\Gamma, \mathrm{A} \wedge \mathrm{B} \vdash \Delta}\,\wedge_{\mathrm{L}} \qquad \frac{\Gamma \vdash \mathrm{A}, \Delta \quad \Gamma \vdash \mathrm{B}, \Delta}{\Gamma \vdash \mathrm{A} \wedge \mathrm{B}, \Delta}\,\wedge_{\mathrm{R}}$$

$$\frac{\Gamma, \mathrm{A} \vdash \Delta \quad \Gamma, \mathrm{B} \vdash \Delta}{\Gamma, \mathrm{A} \vee \mathrm{B} \vdash \Delta}\,\vee_{\mathrm{L}} \qquad \frac{\Gamma \vdash \mathrm{A}, \mathrm{B}, \Delta}{\Gamma \vdash \mathrm{A} \vee \mathrm{B}, \Delta}\,\vee_{\mathrm{R}}$$

$$\frac{\Gamma, \mathrm{A} \to \mathrm{B} \vdash \mathrm{A}, \Delta \quad \Gamma, \mathrm{B} \vdash \Delta}{\Gamma, \mathrm{A} \to \mathrm{B} \vdash \Delta}\,\to_{\mathrm{L}} \qquad \frac{\Gamma, \mathrm{A} \vdash \mathrm{B}}{\Gamma \vdash \mathrm{A} \to \mathrm{B}, \Delta}\,\to_{\mathrm{R}}$$

$$\frac{\Gamma \vdash \mathrm{A}, \Delta \quad \Gamma, \mathrm{B} \vdash \mathrm{A} \prec \mathrm{B}, \Delta}{\Gamma \vdash \mathrm{A} \prec \mathrm{B}, \Delta}\,\prec_{\mathrm{R}} \qquad \frac{\mathrm{A} \vdash \mathrm{B}, \Delta}{\Gamma, \mathrm{A} \prec \mathrm{B} \vdash \Delta}\,\prec_{\mathrm{L}}$$

Fig. 1. Dragalin-style sequent calculus for Bilnt

A *signed formula* is a pair (C, S), written C^{S}, where C is a Bilnt formula and $\mathrm{S} \in \{+, -\}$ is a *sign*. Depending on its principal connective and sign, a signed formula is given a *principal type (ptype)* α or β. If α (respectively β) is the principal type of a signed formula C, then, its left subformula A is of *secondary type (stype)* α_1 (respectively β_1) and its right subformula B is of *secondary type* α_2 (respectively β_2). Signed formulas the principal connective of which belongs to the set $\{\to, \prec\}$ also admit an additional *intuitionistic type (itype)* ϕ, $\overline{\phi}$, ψ or $\overline{\psi}$. The following tables describe how signs, principal, secondary and intuitionistic types are inductively determined.

α	α_1	α_2	β	β_1	β_2
$(\mathrm{A} \wedge \mathrm{B})^+$	A^+	B^+	$(\mathrm{A} \wedge \mathrm{B})^-$	A^-	B^-
$(\mathrm{A} \vee \mathrm{B})^-$	A^-	B^-	$(\mathrm{A} \vee \mathrm{B})^+$	A^+	B^+
$(\mathrm{A} \to \mathrm{B})^-$	A^+	B^-	$(\mathrm{A} \to \mathrm{B})^+$	A^-	B^+
$(\mathrm{A} \prec \mathrm{B})^+$	A^+	B^-	$(\mathrm{A} \prec \mathrm{B})^-$	A^-	B^+

	itype
$(\mathrm{A} \to \mathrm{B})^+$	ϕ
$(\mathrm{A} \to \mathrm{B})^-$	ψ
$(\mathrm{A} \prec \mathrm{B})^+$	$\overline{\psi}$
$(\mathrm{A} \prec \mathrm{B})^-$	$\overline{\phi}$

For readability, we often simply speak of the type of a signed formula each time the context makes it clear what type (ptype, stype or itype) is actually intended; we also write "t-formula" as a shorthand for "formula of type t". Moreover, given a (plain) formula C and a subformula A in C, the (principal, secondary or intuitionistic) type of A in C is defined as the type of the signed formula A^{S} in C^- that (syntactically) corresponds to A.

Let Φ and Ψ be two disjoint and denumerable sets of symbols respectively called variable and constant symbols. We shall use the letters ranging from a to d (possibly subscripted) to denote constant symbols. Similarly, we shall use the letters from x to z to denote variable symbols. For convenience, let us also

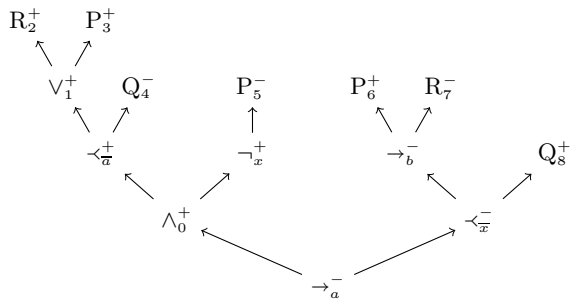

Fig. 2. Indexed formula tree

assume that Ψ always contains the particular symbol ϵ and that if s is a constant (respectively variable) symbol, then so is $\overline{s}$.

Given a formula C, an *indexed formula* can be obtained from C by assigning a unique index (often called "position" in the matrix terminology) to each subformula encountered along a depth first exploration of C^- (w.r.t. the syntactic structure of C) in such a way that ψ- and $\overline{\psi}$-subformulas are indexed with constant symbols in Ψ, ϕ- and $\overline{\phi}$-subformulas are indexed with variable symbols in Φ, all other subformulas being indexed with natural numbers.

Assuming strict total orders $<_\Phi, <_\Psi, <_\mathbb{N}$ on $\Phi, \Psi, \mathbb{N}$, assignments can be made deterministic so as to obtain a one-to-one correspondence between formulas and indexed formulas. We interpret $<_\Phi$ and $<_\Psi$ as lexicographic orders and $<_\mathbb{N}$ as the usual strict order on natural numbers; therefore, each time we have to choose an index for a (sub)formula, we always pick the first symbol in Φ, Ψ or $\mathbb{N}$ (w.r.t. $<_\Phi, <_\Psi, <_\mathbb{N}$) that has not already been used as an index. We write $\mathcal{F}(C, i)$ (respectively $\mathcal{S}f(C, i)$) to denote the unique subformula (respectively signed subformula) associated to the index i in a formula C (or signed formula C^s depending on the context).
For example, indexing $C = (((R \vee P) \prec Q) \wedge \neg P) \rightarrow ((P \rightarrow R) \prec Q)$ we get the indexed (signed) formula

$$(((R_2^+ \vee_1^+ P_3^+) \prec_{\overline{a}}^+ Q_4^-) \wedge_0^+ \neg_x^- P_5^-) \rightarrow_a^- ((P_6^+ \rightarrow_b^- R_7^-) \prec_{\overline{x}}^- Q_8^+)$$

. Since indexes are in a one-to-one correspondence with (signed) formulas, we shall sometimes use indexes in places where (signed) formulas would normally be expected (and vice-versa).

A *formula tree* for a formula C is a representation of its corresponding indexed formula as a syntax tree. A formula tree induces a strict partial ordering $\ll$ on indexes, called the *domination ordering*, which is such that the index of the root is the least element and if $i \ll j$ then i is encountered before j on a path from the root to j. If i is a non-atomic index in C (*i.e.*, if $\mathcal{F}(C, i)$ is a non-atomic formula) then the two indexes j and k such that $\mathcal{F}(C, j)$ and $\mathcal{F}(C, k)$ are the immediate (left and right) subformulas of $\mathcal{F}(C, i)$ are called

dual and we write $j \triangle k = i$. Figure 2 shows the formula tree associated with $(((\mathrm{R} \vee \mathrm{P}) \prec \mathrm{Q}) \wedge \neg \mathrm{P}) \rightarrow ((\mathrm{P} \rightarrow \mathrm{R}) \prec \mathrm{Q})$.

In the standard sequent calculus of Figure 1, contraction is internalized by the repetition of the principal formula $\mathrm{A} \rightarrow \mathrm{B}$ (respectively $\mathrm{A} \prec \mathrm{B}$) in the left (respectively right) premiss of the $\rightarrow_{\mathrm{L}}$ (respectively $\prec_{\mathrm{R}}$) rule so that there is no need for an explicit contraction rule. In a connection-based setting contraction is usually handled via the notion of *multiplicity*. Given a formula C of BiInt, a multiplicity for C is a function $\mu()$ which assigns a natural number to each ϕ- or $\overline{\phi}$-subformula A in C. The formula $\mu(\mathrm{C})$ is then defined as the formula obtained from C by replacing every subformula A in C such that $\mu(\mathrm{A}) = n$ with the subformula $\mathrm{A} \wedge \mathrm{A} \wedge \ldots \wedge \mathrm{A}$, where the connective $\wedge$ occurs exactly n times. For example, if $\mathrm{C} = (\mathrm{P} \rightarrow \mathrm{Q}) \rightarrow (\mathrm{R} \prec \mathrm{S})$, $\mu(\mathrm{P} \rightarrow \mathrm{Q}) = 1$ and $\mu(\mathrm{R} \prec \mathrm{S}) = 2$, then $\mu(\mathrm{C}) = ((\mathrm{P} \rightarrow \mathrm{Q}) \wedge (\mathrm{P} \rightarrow \mathrm{Q})) \rightarrow ((\mathrm{R} \prec \mathrm{S}) \wedge (\mathrm{R} \prec \mathrm{S}) \wedge (\mathrm{R} \prec \mathrm{S}))$. Intuitively, a multiplicity function encodes the number of copies that would be allowed (via contraction) for each ϕ- or $\overline{\phi}$-formula in a sequent-style derivation.

For convenience, when dealing with indexed formulas, we use superscripted indexes to distinguish between the copies of ϕ- and $\overline{\phi}$-formulas. For the previous example, if we assume that x is the index of $\mathrm{R} \prec \mathrm{S}$ in C, then $\mu(\mathrm{R} \prec \mathrm{S}) = 2$ implies that x^1 and x^2 should respectively be the indexes of the first and second additional copies of $\mathrm{R} \prec \mathrm{S}$ in $\mu(\mathrm{C})$. The previous notions are fairly common to most connection-based characterizations of validity. If we were to follow the standard recipe for such characterizations, the next step would be the introduction of the key notions of (atomic) matrix paths, connections and spanning sets together with admissible substitutions leading to irreflexive reduction orderings. However, we shall not follow the standard approach for the upcoming sections and rather introduce the concept of R-graphs since it allows us to reformulate all the standard notions on the same graphical structure. Moreover, R-graphs can easily be turned into Kripke models when dealing with non valid formulas.

4 Bi-intuitionistic R-graphs

From a very general point of view, R-graphs for a given logic are directed graphs in which vertices are meant to represent worlds in the underlying Kripke semantics of the logic [5]. Let us first define the general notion of R-graph before restricting it to match the bi-intuitionistic case.

Definition 2 (R-graph). *A* R-graph *(RG) is a directed graph $G(V, E)$ with vertices V and edges E. The vertices are named with elements of $\Psi \cup \Phi$. Moreover, V is required to contain a distinguished vertex ϵ called the* ϵ-vertex*, every vertex u is associated with a set $\mathcal{F}(G, u)$ of signed formulas the elements of which are referred to as the* tags *of u, and every edge e is tagged with a letter $\mathcal{T}(G, e)$ from the set $\mathcal{T} = \{\psi, \phi, \bar{\psi}, \bar{\phi}, \sigma, \kappa\}$ of edge-tags.*

A vertex named with a constant symbol (respectively variable symbol) is called a ψ-vertex (respectively ϕ-vertex). The set of ψ-vertices (respectively ϕ-vertices) is written V^{Ψ} (respectively V^{Φ}). We use the letters u, v and w to range

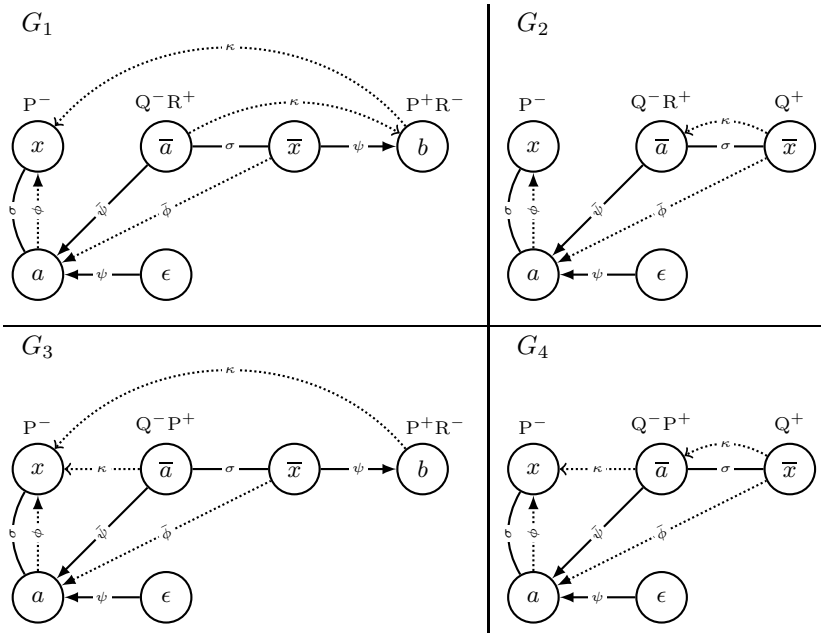

Fig. 3. Bi-intuitionistic R-graphs

over arbitrary vertices and we write $u[\tau]v$ to denote the edge, tagged with the letter $\tau \in \mathcal{T}$, that goes from u to v; we then call this edge a τ-edge and say that u and v respectively are its *source* and *target*. Given a subset $T \subseteq \mathcal{T}$, the set of all τ-edges such that $\tau \in T$ is written E^T.

Definition 3 (Bi-intuitionistic RG). *A R-graph $G(V, E)$ is a bi-intuitionistic R-graph (biRG) if it satisfies the following structural conditions:*

- *every ψ-edge has a ψ-vertex as its target;*
- *every $\bar{\psi}$-edge has a ψ-vertex as its source;*
- *every ϕ-edge has a ϕ-vertex as its target;*
- *every $\bar{\phi}$-edge has a ϕ-vertex as its source;*
- *every σ-edge induces a "bidirectional" link between a ϕ-vertex and a ψ-vertex, more formally, $u[\sigma]v \in E$ iff $v[\sigma]u \in E$, with either $u \in V^{\Psi}$ and $v \in V^{\Phi}$, or $u \in V^{\Phi}$ and $v \in V^{\Psi}$;*
- *every κ-edge $u[\kappa]v$ is a link between two (arbitrary) vertices such that there exists at least one formula occurring positively (with a "+" sign) in $\mathcal{F}(G, u)$ and negatively (with a "−" sign) in $\mathcal{F}(G, v)$.*

Figure 3 gives some examples of bi-intuitionistic R-graphs. We shall explain in the next section how such graphs can be associated with formulas and discuss them in more details.

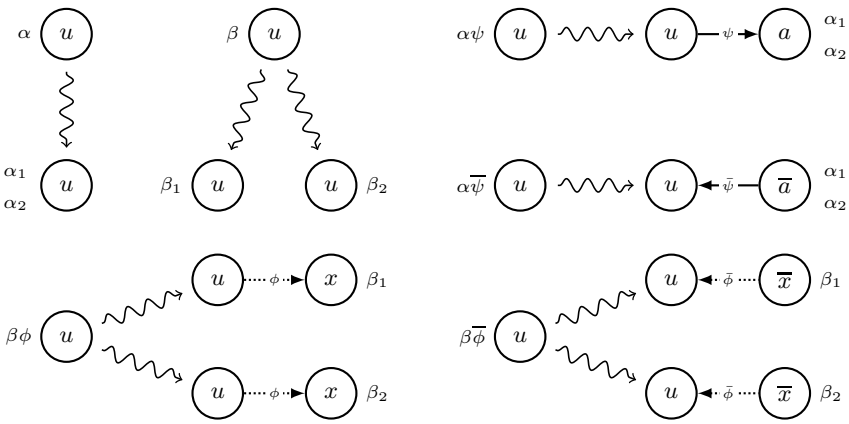

a (resp. $\overline{a}$, x, $\overline{x}$) is the index of the $\alpha\psi$- (resp. $\alpha\overline{\psi}$-, $\beta\phi$-, $\beta\overline{\phi}$-) formula under reduction.

Fig. 4. Reduction rules

5 R-graph Reductions

Standard matrix characterizations heavily rely on the notion of (atomic) matrix paths through a given formula C. In our setting, such atomic matrix paths are replaced with the notion of irreducible R-graphs.

Given a BiInt formula A, a *(biRG-)reduction through* A is a sequence $\mathcal{R} = R_0\rho_1 \ldots \rho_{i-1}\rho_i \ldots$ in which R_0 is a collection (of biRGs) containing the single biRG $G_0(V_0, E_0)$, where $V_0 = \{\epsilon\}$, $E_0 = \emptyset$ and $\mathcal{F}(G_0, \epsilon) = \{\mathrm{A}^-\}$, and each ρ_i is a reduction step that transforms the collection R_{i-1} inherited from the previous reduction step into a new collection R_i by applying one of the reduction rules given in Fig. 4.

In order to apply a reduction rule to a biRG $G(V, E)$, one first needs to choose a vertex u in V and a signed formula A^{s} in $\mathcal{F}(G, u)$.

- If A^{s} has principal type α and has no intuitionistic type, $G(V, E)$ is reduced to the new biRG $G_1(V_1, E_1)$ such that $V_1 = V$, $E_1 = E$, $\mathcal{F}(G_1, v) = \mathcal{F}(G, v)$ for all $v \neq u$ and $\mathcal{F}(G_1, u) = \mathcal{F}(G, u) \cup \{\alpha_1(\mathrm{A}^{\mathrm{s}}), \alpha_2(\mathrm{A}^{\mathrm{s}})\}$, where $\alpha_1(\mathrm{A}^{\mathrm{s}})$ and $\alpha_2(\mathrm{A}^{\mathrm{s}})$ respectively are the first and second signed subformulas of A^{s} (of secondary type α_1 and α_2).
- If A^{s} has principal type β and has no intuitionistic type, $G(V, E)$ is reduced to two new biRGs $G_1(V_1, E_1)$, $G_2(V_2, E_2)$ such that for $i \in \{1, 2\}$, $V_i = V$, $E_i = E$, $\mathcal{F}(G_i, v) = \mathcal{F}(G, v)$ for all $v \neq u$ and $\mathcal{F}(G_i, u) = \mathcal{F}(G, u) \cup \{\beta_i(\mathrm{A}^{\mathrm{s}})\}$.

The previous reduction rules are the reformulation of the standard α and β matrix-path reduction rules. The next two reduction rules are specific to BiInt and depend on the index (a, $\overline{a}$, x or $\overline{x}$) and intuitionistic type of the signed formula under reduction (principal formula).

- If A^{s} has principal type α and has intuitionistic type ψ (respectively $\overline{\psi}$), $G(V, E)$ is reduced to the new biRG $G_1(V_1, E_1)$ such that $V_1 = V \cup \{a\}$ and

$E_1 = E \cup \{u[\psi]a\}$ (respectively $V_1 = V \cup \{\overline{a}\}$ and $E_1 = E \cup \{\overline{a}[\bar{\psi}]u\}$). Moreover, $\mathcal{F}(G_1, v) = \mathcal{F}(G, v)$ for all $v \neq a$ (respectively $v \neq \overline{a}$), and $\mathcal{F}(G_1, a) = \{\alpha_1(\mathrm{A}^{\mathrm{s}}), \alpha_2(\mathrm{A}^{\mathrm{s}})\}$ (respectively $\mathcal{F}(G_1, \overline{a}) = \{\alpha_1(\mathrm{A}^{\mathrm{s}}), \alpha_2(\mathrm{A}^{\mathrm{s}})\}$).

- If A^{s} has principal type β and has intuitionistic type ϕ (respectively $\overline{\phi}$), $G(V, E)$ is reduced to two new biRGs $G_1(V_1, E_1)$, $G_2(V_2, E_2)$ such that for $i \in \{1, 2\}$, $V_i = V \cup \{x\}$ and $E_i = E \cup \{u[\phi]x\}$ (respectively $V_i = V \cup \{\overline{x}\}$ and $E_i = E \cup \{\overline{x}[\bar{\phi}]u\}$). Moreover, $\mathcal{F}(G_i, v) = \mathcal{F}(G, v)$ for all $v \neq x$ (respectively $v \neq \overline{x}$) and $\mathcal{F}(G_i, x)$ (respectively $\mathcal{F}(G_i, \overline{x})$) $= \{\mathrm{A}^{\mathrm{s}}\} \cup \{\beta_i(\mathrm{A}^{\mathrm{s}})\}$.

Let us remark that we have chosen to prevent the reduction rules from discarding their principal formula from the tags of u (although we shall forget about them in graphical representations to increase readability). This is not a strict requirement but it makes the counter-model construction process (*e.g.*, the saturation relation) easier to define.

Definition 4 (irreducibility). *A biRG is* irreducible *if it is stable under the reduction rules; it is* reducible *otherwise. Accordingly, a collection R of biRGs is* irreducible *if and only if all biRGs in R are irreducible.*

Let $\mathcal{R}$ be a reduction through A, we say that $\mathcal{R}$ is *finished* if and only if for some natural number n, the collection R_n in $\mathcal{R}$ is irreducible and for all R_m in $\mathcal{R}$ such that $m < n$, R_m is not irreducible. We then say that n is the length of the reduction $\mathcal{R}$. Since we consider formulas indexed w.r.t. a given multiplicity, an inspection of the reduction rules of Figure 4 shows that all finished reductions through A lead to the same irreducible biRG-collection denoted R_f and called the *final* biRG-collection through A. Every biRG in R_f is then called an irreducible biRG through A.
If one forgets about the σ- and κ-edges, Figure 3 gives examples of irreducible biRGs[1] through $(((\mathrm{R}_2^+ \vee_1^+ \mathrm{P}_3^+) \prec_{\overline{a}}^+ \mathrm{Q}_4^-) \wedge_0^+ \neg_x^- \mathrm{P}_5^-) \rightarrow_a^- ((\mathrm{P}_6^+ \rightarrow_b^- \mathrm{R}_7^-) \prec_{\overline{x}}^- \mathrm{Q}_8^+)$.

6 Validity through R-graphs

Before stating our connection-based characterization of BiInt validity, we need to define the notions of slice, concrete path and admissible R-graphs.

Definition 5 (slice). *Let $G(V, E)$ be a biRG and S be a subset of V, the S-*slice *of G is defined as the smallest (w.r.t. the number of vertices and edges) biRG $G^S(V^S, E^S)$ such that $S \subseteq V^S$ and for all vertices $u \in V^S$ and $v \in V$,*

- *if $v[\tau]u \in E$ and $\tau \in \{\psi, \phi, \sigma\}$, then $v \in V^S$ and $v[\tau]u \in E^S$;*
- *if $u[\tau]v \in E$ and $\tau \in \{\bar{\psi}, \bar{\phi}, \sigma\}$, then $v \in V^S$ and $u[\tau]v \in E^S$.*

The purpose of a slice is to capture only the essential information, *i.e.*, the minimal portion of a biRG, that is necessary to establish the validity of a BiInt formula. Let us remark that in the construction of a slice $\bar{\psi}$- and $\bar{\phi}$-edges are traversed forward, from their source to their target, while ψ- and ϕ-edges are traversed backward, from their target to their source.

[1] For readability, non-atomic signed formulas are not mentioned in the vertex tags.

Definition 6 (path). *Given two vertices u, v in a biRG $G(V, E)$, a path in G from u to v is a sequence $u_0\tau_1u_1 \ldots u_{p-1}\tau_pu_p$ such that $u_0 = u$, $u_p = v$ and for all $1 \leqslant i \leqslant p$, u_i is a vertex in V, τ_i is an edge-tag in $\mathcal{T}$ and there exists a τ_i-edge $u_{i-1}[\tau_i]u_i$ in E. A cycle is a path such that the initial and terminal vertices are the same,* i.e., $u_0 = u_p$.

Given a subset T of $\mathcal{T}$, a T-path is a path $P = u_0\tau_1u_1 \ldots u_{p-1}\tau_pu_p$ such that for all $1 \leqslant i \leqslant p$, $\tau_i \in T$. In particular, when $T = \{\psi, \bar{\psi}, \sigma\}$, P is called a *concrete path* (in the graphical representation, a path using only solid edges). T-cycles and concrete cycles are defined accordingly. Using the previous notions, we define the relation (__ ▶ _) such that $Gu \blacktriangleright v$ holds if and only if $u = v$ or there exists at least one concrete path from u to v in G.

Definition 7 (admissibility). *A biRG $G(V, E)$ is* admissible *if and only if*

- *all concrete cycles in G are σ-cycles that contain at most one ψ-vertex and*
- *for all τ-edges $u[\tau]v$ in E such that $\tau \in \{\phi, \bar{\phi}\}$, $Gu \blacktriangleright v$ (in other words, there is a concrete path in G from u to v).*

Definition 8 (consistency). *A biRG $G(V, E)$ is* inconsistent *if and only if $(\exists u \in V)(\bot^+ \in \mathcal{F}(G, u))$; it is* consistent *otherwise.*

Definition 9 (complementarity). *A biRG $G(V, E)$ is* complementary *if and only if there is at least one κ-edge $u[\kappa]v$ in E such that the slice $G^{\{u,v\}}$ is admissible and $G^{\{u,v\}}u \blacktriangleright v$ (there is a concrete path in the slice from u to v).*

A collection of biRGs is inconsistent (respectively admissible) if it contains at least one biRG which is inconsistent (respectively admissible). On the contrary, a collection is *complementary* if all of its biRGs are complementary.

6.1 Characterization of Validity

Starting with the final biRG-collection R_f through a BiInt formula A, we define the notions of σ- and κ-bindings.

A local σ-binding for a biRG $G(V, E)$ is a function σ that extends $G(V, E)$ by inserting σ-links (bidirectional σ-edges) in E. More formally, $\sigma(G(V, E)) = G_\sigma(V_\sigma, E_\sigma)$ such that $V_\sigma = \sigma(V) = V$ and $E_\sigma = \sigma(E) = E \cup \Sigma$, where σ is a set of σ-links between vertices of V^Φ and vertices of V^Ψ. Let us remark that a local σ-binding is completely determined by Σ.

Given two collections $R = \{G_1, \ldots, G_n\}$ and $S = \{\sigma_1, \ldots, \sigma_n\}$ such that for all $1 \leqslant i \leqslant n$, σ_i is a local σ-binding for the biRG G_i, the global σ-binding $\overline{\sigma}$ for R (induced by S) is defined as $\overline{\sigma}(G_i) = \sigma_i(G_i)$ for all $1 \leqslant i \leqslant n$. A global σ-binding induces a relation $\sqsubset$ on $\Psi \times \Phi$ such that $a \sqsubset x$ if there is a σ-link $a[\sigma]x$ in $\overline{\sigma}(G_i)$ for some $1 \leqslant i \leqslant n$. A local σ-binding σ is admissible for a biRG G if $\sigma(G)$ is admissible. A global σ-binding $\overline{\sigma}$ is admissible for a biRG-collection R if for all G in R, $\overline{\sigma}(G)$ is admissible. Local and global κ-bindings are defined accordingly w.r.t. the structural conditions required for κ-edges in Definition 3.

Definition 10 (bi-intuitionistic validity). *A* BiInt *formula* A *is biRG-valid if and only if there exists some multiplicity μ, a (global) σ-binding $\overline{\sigma}$ and a (global) κ-binding $\overline{\kappa}$ for the final biRG-collection R_f of irreducible biRGs through $\mu(\mathrm{A})$ such that:*

1. *For all (not necessarily distinct) biRGs $G_1(V_1, E_1), G_2(V_2, E_2)$ in $\overline{\sigma} \circ \overline{\kappa}(R_f)$ and all ϕ-vertices x in $V_1 \cap V_2$, if $x[\sigma]u \in E_1$ and $x[\sigma]v \in E_2$ then $u = v$.*
2. *For all consistent biRGs $G(V, E)$ in $\overline{\sigma} \circ \overline{\kappa}(R_f)$, $G(V, E)$ is complementary.*
3. *The* reduction ordering $\lhd = (\ll \cup \sqsubset)^+$ *induced by $\overline{\sigma}$, where $(\cdot)^+$ stands for transitive closure, is irreflexive.*

Using the previous definition and the irreducible biRGs of Figure 3, it is easy to see that $(((\mathrm{R}_2 \vee_1 \mathrm{P}_3) \prec_{\overline{a}} \mathrm{Q}_4) \wedge_0 \neg_x \mathrm{P}_5) \rightarrow_a ((\mathrm{P}_6 \rightarrow_b \mathrm{R}_7) \prec_{\overline{x}} \mathrm{Q}_8)$ is biRG-valid. Let us now discuss the soundness and completeness of the characterization.

6.2 Soundness and Completeness of the Characterization

Definition 10 can be used to extract a labelled calculus the rules of which generate bi-intuitionistic R-graphs. Such a calculus is depicted in Fig. 5 and generates one biRG per branch in a derivation, which is induced by the edges (written as side conditions) introduced along that branch by the inference rules $\rightarrow_{\mathrm{L}}$, $\rightarrow_{\mathrm{R}}$, $\rightarrow_{\mathrm{L}}$ and $\rightarrow_{\mathrm{R}}$. A labelled formula $\mathrm{A}[v]$ on the left- (respectively right-) hand side of a labelled sequent simply means that A^+ (respectively A^-) appears in the tags of the vertex u.
Moreover, the notion of global σ-binding gives rise to the more standard notion of global substitution, *i.e.*, $\sigma(x) = a$ iff there is a σ-link between x and a in some irreducible biRG associated with some irreducible initial sequent[2] of a derivation. Similarly, there is a κ-edge from u and v in the irreducible biRG associated with an irreducible initial sequent s of a derivation iff there are some labelled formulas $\mathrm{A}[u]$ and $\mathrm{A}[v]$ occurring on the left-hand and right-hand side of s respectively. An example of a derivation in that labelled calculus is given in Sect. 8, where variable splitting is discussed.

Theorem 1. *Let* A *be a* BiInt *formula.* A *is biRG-valid iff* A *is valid in the Kripke semantics.*

Proof. The soundness and completeness proofs rely on the labelled calculus given in Fig. 5. The soundness proof follows the standard pattern of proving that every inference rule of the calculus preserves a standard notion of realizability in BiInt Kripke models. The completeness proof proceeds by counter-model construction from any admissible, consistent and saturated R-graph in the final collection of a finished reduction through A.

[2] A sequent that contains only atomic formulas.

$$\frac{}{\Gamma, \mathrm{A}[u] \vdash \mathrm{A}[u], \Delta}\,\mathrm{ax} \qquad \frac{}{\Gamma, \bot[u] \vdash \Delta}\,\bot_{\mathrm{L}}$$

$$\frac{\Gamma, \mathrm{A}[u], \mathrm{B}[u] \vdash \Delta}{\Gamma, (\mathrm{A} \wedge \mathrm{B})[u] \vdash \Delta}\,\wedge_{\mathrm{L}} \qquad \frac{\Gamma \vdash \mathrm{A}[u], \Delta \qquad \Gamma \vdash \mathrm{B}[u], \Delta}{\Gamma \vdash (\mathrm{A} \wedge \mathrm{B})[u], \Delta}\,\wedge_{\mathrm{R}}$$

$$\frac{\Gamma, \mathrm{A}[u] \vdash \Delta \qquad \Gamma, \mathrm{B}[u] \vdash \Delta}{\Gamma, (\mathrm{A} \vee \mathrm{B})[u] \vdash \Delta}\,\vee_{\mathrm{L}} \qquad \frac{\Gamma \vdash \mathrm{A}[u], \mathrm{B}[u], \Delta}{\Gamma \vdash (\mathrm{A} \vee \mathrm{B})[u], \Delta}\,\vee_{\mathrm{R}}$$

$$\frac{\Gamma \vdash \mathrm{A}[x], \Delta \qquad \Gamma, \mathrm{B}[x] \vdash \Delta}{\Gamma, (\mathrm{A} \to \mathrm{B})[u] \vdash \Delta}\,u[\phi]x \qquad \frac{\Gamma, \mathrm{A}[a] \vdash \mathrm{B}[a], \Delta}{\Gamma \vdash (\mathrm{A} \to \mathrm{B})[u], \Delta}\,u[\psi]a$$

$$\frac{\Gamma \vdash \mathrm{A}[\overline{x}], \Delta \qquad \Gamma, \mathrm{B}[\overline{x}] \vdash \Delta}{\Gamma \vdash (\mathrm{A} \prec \mathrm{B})[u], \Delta}\,\overline{x}[\bar{\phi}]u \qquad \frac{\Gamma, \mathrm{A}[\overline{a}] \vdash \mathrm{B}[\overline{a}], \Delta}{\Gamma, (\mathrm{A} \prec \mathrm{B})[u] \vdash \Delta}\,\overline{a}[\bar{\psi}]u$$

Fig. 5. Labelled calculus for BiInt

6.3 Counter-Model Construction

We first need to define a saturation relation which plays the same role for biRGs that Hintikka collections play for sets of formulas in intuitionistic logic.

Definition 11 (saturation). *Let $G(V, E)$ be a biRG. The* saturation *relation (on $G(V, E)$) is defined as the smallest relation between vertices and signed formulas such that:*

- *Base case: for all* A *in* $\{\bot\} \cup \mathcal{V}$,
  - $Gu \Vdash \mathrm{A}^+$ *iff* $(\exists v \in V)(Gv \blacktriangleright u$ *and* $\mathrm{A}^+ \in \mathcal{F}(G, v))$;
  - $Gu \Vdash \mathrm{A}^-$ *iff* $(\exists v \in V)(Gu \blacktriangleright v$ *and* $\mathrm{A}^- \in \mathcal{F}(G, v))$;
- *Induction:*
  - $Gu \Vdash (\mathrm{A} \wedge \mathrm{B})^+$ *iff* $Gu \Vdash \mathrm{A}^+$ *and* $Gu \Vdash \mathrm{B}^+$;
  - $Gu \Vdash (\mathrm{A} \wedge \mathrm{B})^-$ *iff* $Gu \Vdash \mathrm{A}^-$ *or* $Gu \Vdash \mathrm{B}^-$;
  - $Gu \Vdash (\mathrm{A} \vee \mathrm{B})^+$ *iff* $Gu \Vdash \mathrm{A}^+$ *or* $Gu \Vdash \mathrm{B}^+$;
  - $Gu \Vdash (\mathrm{A} \vee \mathrm{B})^-$ *iff* $Gu \Vdash \mathrm{A}^-$ *and* $Gu \Vdash \mathrm{B}^-$;
  - $Gu \Vdash (\mathrm{A} \to \mathrm{B})^+$ *iff* $(\forall v \in V)($*if* $Gu \blacktriangleright v$ *and* $Gv \Vdash \mathrm{A}^+$ *then* $Gv \Vdash \mathrm{B}^+)$;
  - $Gu \Vdash (\mathrm{A} \to \mathrm{B})^-$ *iff* $(\exists v \in V)(Gu \blacktriangleright v$ *and* $Gv \Vdash \mathrm{A}^+$ *and* $Gv \Vdash \mathrm{B}^-)$;
  - $Gu \Vdash (\mathrm{A} \prec \mathrm{B})^+$ *iff* $(\exists v \in V)(Gv \blacktriangleright u$ *and* $Gv \Vdash \mathrm{A}^+$ *and* $Gv \Vdash \mathrm{B}^-)$;
  - $Gu \Vdash (\mathrm{A} \prec \mathrm{B})^-$ *iff* $(\forall v \in V)($*if* $Gv \blacktriangleright u$ *and* $Gv \Vdash \mathrm{A}^+$ *then* $Gv \Vdash \mathrm{B}^+)$.

$G(V, E)$ *is* saturated *if and only if* $(\forall u \in V)(\forall \mathrm{C}^{\mathrm{S}} \in \mathcal{F}(G, u))(Gu \Vdash \mathrm{C}^{\mathrm{S}})$.

Let us illustrate how to extract counter-models from saturated biRGs with a short example, the formula $\mathrm{D} = \mathrm{Q} \to ((\neg(\mathrm{P} \prec \mathrm{Q}) \prec \mathrm{P}) \vee \mathrm{P})$. Up to σ- and κ-edges, the collection of irreducible biRGs through D are depicted below.

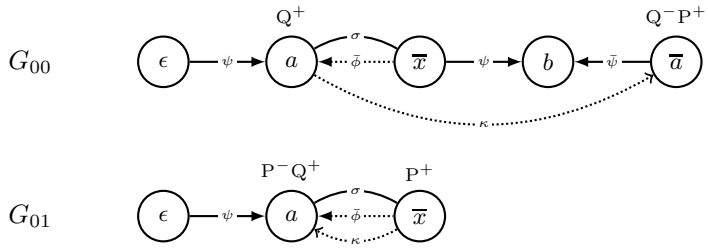

Both biRGs G_{00} and G_{01} are admissible and consistent, but only G_{00} is not complementary. Moreover, it happens that G_{00} is also saturated. In order to turn G_{00} into a counter-model of D, we first calculate the quotient of G_{00} by the equivalence generated by the σ-edges which leads to the following set of vertex-classes: $V = \{\dot{\epsilon}, \dot{a}, \dot{b}, \dot{\overline{a}} \mid \dot{\epsilon} = \{\epsilon\}, \dot{a} = \dot{\overline{x}} = \{a, \overline{x}\}, \dot{b} = \{b\}, \dot{\overline{a}} = \{\overline{a}\}\}$. Then, we consider V as a set of worlds and define an accessibility relation $\sqsubseteq$ between worlds of V as follows: $(\forall m, n \in V)(m \sqsubseteq n \text{ iff } (\exists m' \in m)(\exists n' \in n)(Gm' \blacktriangleright n'))$. Finally, we define the forcing relation by setting the following interpretation: $(\forall \mathrm{P} \in \mathcal{V})(\forall m \in V)(\mathrm{P} \in m \text{ iff } (\exists m' \in m)(\mathrm{P}^+ \in \mathcal{F}(G, m')))$, which leads to following bi-intuitionistic Kripke model:

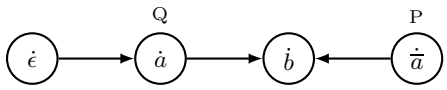

It is not difficult to generalize the previous example so as to extract a counter-model from any consistent, admissible and saturated biRG that cannot be made complementary in any way (under any σ- and κ-bindings).

7 Solving Admissibility Constraints

In plain intuitionistic logic, we could use prefixes instead of labels and resort to T-string (prefix) unification to solve prefix constraints [8]. However we cannot do that in the case of Bilnt because a prefix essentially is a way to encode the path to a given node in a Kripke tree. Since the Kripke semantics of Bilnt deals with graphs instead of trees, there can be several distinct paths to a given node and taking care of that using prefixes (by encoding both successors and predecessors) would break the T-string property of such prefixes, which in turns prevents the use of T-string unification.

Given an admissible σ-binding, it is not difficult to check whether κ-edges are covered by a concrete path or not, the problem is to find such σ-bindings. A trivial but particularly inefficient solution would be to enumerate all possible σ-bindings and check whether they are admissible or not. As a first step toward more efficient solutions, we now sketch an algorithm that only enumerates admissible σ-bindings for a given biRG (which is a slice determined by a κ-edge) that also preserves the acyclicity of the underlying reduction ordering $\lhd$. For that, we first need the notion of *walk* through a biRG which is similar to the

notion of path described in Definition 6 except that in a walk $\bar{\phi}$- and $\bar{\psi}$-edges must be crossed backward from their target to their source and σ-edges can only be crossed from their ψ-vertex to their ϕ-vertex. T-walks are defined accordingly as walks that only cross τ-edges such that $\tau \in T$ and, whenever $T = \{\psi, \bar{\psi}, \sigma\}$, a T-walk is called a concrete walk.

Let u be an arbitrary vertex in a biRG, we define $A_T^n(u)$ (resp. $B_T^n(u)$) as the set of all ψ-vertices that can be reached from u (resp. from which u can be reached) by a T-walk of length n. The two sets $S_T^n(u)$ and $P_T^n(u)$ are defined analogously using the notion T-path instead of T-walk. In particular, for all $F \in \{S, P, A, B\}$, $F_T^0(u) = \{u\}$ if u is a ψ-vertex and $\emptyset$ otherwise. For readability, we forget the T subscript whenever $T = \{\phi, \bar{\phi}, \psi, \bar{\psi}\}$. Finally, let $F(u) = \bigcup_{i \in \mathbb{N}} F^i(u)$ and let $t \in \{\phi, \overline{\phi}\}$ denote an intuitionistic type and u, v be two vertices, we then define the set $M_t(u, v)$ as $M_t(u) - A(v)$ with $M_\phi = S$ and $M_{\overline{\phi}} = P$.

Our solving algorithm relies on two particular objects $R(u)$ and $D(u)$ that are computed for all ϕ-vertices u in the biRG $G(V, E)$ under consideration. In the initial step, $R(u) = B_t^1(u)$ and $D(u) = M_t(R(u), u)$ for all $u \in V^\Phi$. Intuitively, $D(u)$ (called the *domain* of u) is meant to represent all suitables instantiations for u (*i.e.*, ψ-vertices that would be suitable targets for a σ-link the source of which is u) and $R(u)$ (called the *root* of u) initially is the vertex responsible for the introduction of u in the biRG reduction process. In a second step, all ϕ-edges are partially ordered in a list $X = x_1, \ldots, x_n$ so that if $i < j$ and $x_i \propto x_j$ then $x_j \propto x_i$, where $\propto$ is the following notion of *variable dependency*: let x and y be two ϕ-vertices, we say that x *depends on* y, and we write $x \propto y$, if and only if $x \in D(y)$. Intuitively, if x depends on y then y should be bound before x because some ψ-vertices may only become admissible for x after y gets bound to some specific ψ-vertex. The third step finally consists of the actual enumeration: for each ϕ-vertex $u{=}x_i$ in X, select a ψ-vertex c in $D(u)$ (then assuming the addition of a σ-link $u[\sigma]c$) and apply the corresponding rule of Figure 6, more precisely perform

$$\texttt{applyRule} := \texttt{selectRule}(u, c, v) \ ; \ R(v), D(v) := \texttt{applyRule}(u, c, v)$$

on all $v = x_j$ in X such that $j > i$. If all ϕ-vertices in X can be bound then we have an admissible σ-binding and we just check whether the κ-edge we are interested in (*i.e.*, the one that determines the slice which corresponds to the biRG we are working on) is covered by a concrete path. If so, we are done, otherwise, we must backtrack and perform a distinct selection of ψ-vertices until a solution is found or all possible choices have been exhausted.

8 Variable Splitting

In this section we briefly discuss how the technique of variable splitting recently developed for prefixes [1] can be adapted to our R-graph based setting. Let us illustrate the main ideas with a short example. With a multiplicity $\mu(x) = \mu((\mathrm{P} \to \mathrm{P}) \to \mathrm{P}) = 0$, it is not possible to prove the validity of the formula for

Rule	`selectRule(`u`,`c`,`v`)`	`applyRule(`u`,`c`,`v`)`
Bind	$R(v) = u$	$c,\ D(v) \cup M_t(c, v)$
Narrow	$c \in A(v)$	$R(v),\ D(v) - A(u)$
Widen	$c = R(v) \wedge (c \neq R(u) \vee \mathit{itype}(u) = \mathit{itype}(v)$	$R(v),\ D(v) \cup M_t(u, v)$

Fig. 6. Solving rules given that $v \neq u$ and $\mathit{itype}(v) = t$

which a derivation in the labelled calculus of Figure 5 is given below (indexes are indicated as subscripts).

$$\dfrac{\dfrac{\dfrac{\dfrac{}{\mathrm{P}_{2[d]} \vdash \mathrm{P}_{3[d]}}\,ax}{\vdash (\mathrm{P}_2 \to \mathrm{P}_3)_{d[x]}}\,x[\psi]d \qquad \dfrac{\dfrac{\mathrm{P}_{4[x]}, \mathrm{Q}_{6[b]} \vdash \mathrm{P}_{7[b]}}{\mathrm{P}_{4[x]} \vdash (\mathrm{Q}_6 \to \mathrm{P}_7)_{b[a]}}\,a[\psi]b \quad \dfrac{\mathrm{P}_{4[x]}, \mathrm{R}_{8[c]} \vdash \mathrm{P}_{9[c]}}{\mathrm{P}_{4[x]} \vdash (\mathrm{R}_8 \to \mathrm{P}_9)_{c[a]}}\,a[\psi]c}{\mathrm{P}_{4[x]} \vdash ((\mathrm{Q}_6 \to \mathrm{P}_7)_b \wedge (\mathrm{R}_8 \to \mathrm{P}_9)_c)_{5[a]}}\,\wedge_{\mathrm{R}}}{((\mathrm{P}_2 \to \mathrm{P}_3)_d \to \mathrm{P}_4)_{x[a]} \vdash ((\mathrm{Q}_6 \to \mathrm{P}_7)_b \wedge (\mathrm{R}_8 \to \mathrm{P}_9)_c)_{5[a]}}\,a[\phi]x}{(((\mathrm{P}_2 \to \mathrm{P}_3)_d \to \mathrm{P}_4)_x \to ((\mathrm{Q}_6 \to \mathrm{P}_7)_b \wedge (\mathrm{R}_8 \to \mathrm{P}_9)_c)_5)_{a[\epsilon]}}\,\epsilon[\psi]a$$

The first initial sequent[3] requires $\sigma_1 = \{x/c\}$ while the second one requires $\sigma_2 = \{x/b\}$. The conflict on x thus makes it impossible to compute a global substitution from the two local substitutions σ_1 and σ_2. A first solution would be to increase multiplicity in order to have one copy x^1 of the variable x so as to set $\sigma_1 = \{x/c\}$ and $\sigma_2 = \{x^1/b\}$. The price to pay for this solution is an unnecessary longer derivation because, in this example, assigning two distinct values to the variable x would not harm soundness. The problem actually lies in the fact that the labelled calculus is *variable sharing*: the same ϕ- or $\overline{\phi}$-formula occurring in distinct branches leads to the introduction of the same variable in all branches since we use the index of that formula as the introduced variable.

Variable sharing leads to full permutability of the rules, but also results in potentially longer derivations. Had we allowed the $\to_{\mathrm{L}}$ and $\prec_{\mathrm{R}}$ rules to introduce a fresh copy of the variable associated to its principal ϕ- or $\overline{\phi}$-formula for each of its occurrences in distinct branches of a derivation, expanding the β-formula $(\mathrm{Q} \to \mathrm{P}) \wedge (\mathrm{R} \to \mathrm{P})$ before the ϕ-formula $(\mathrm{P} \to \mathrm{P}) \to \mathrm{P}$ in our example would have resulted in the introduction of the variable x in the branch corresponding to the first premiss of $\wedge_{\mathrm{L}}$ and of a fresh copy x^1 in the branch corresponding to the second premiss of $\wedge_{\mathrm{R}}$. However, such a *variable pure* formulation of our labelled calculus would break full permutability: β-formulas need to be expanded before ϕ- and $\overline{\phi}$-formulas to enable as many copies of each variable as possible.

Variable splitting is a technique developed for variable sharing calculi that allows a (shared) variable to be assigned a specific value in each distinct branch it occurs in, which enables the computation of local substitutions and helps keeping derivations shorter. Let A be a BiInt formula. A *splitting set* for A is a set of dual-free indexes of secondary type β_1 or β_2 which is downward

[3] Indexing initial sequents of the derivation from right to left.

closed w.r.t. the tree ordering $\ll$. In order to enable variable splitting for our labelled calculus, we need to replace variables with *colored variables*, *i.e.*, pairs x^X where x is a variable occurring as an index in A and X is a splitting set for A. Substitutions are replaced with *colored substitutions* accordingly. A colored substitution σ induces a *splitting ordering* which is the least relation between β- and ϕ- or $\overline{\phi}$-indexes such that if $\sigma(x^X) \neq \sigma(x^Y)$, then there are dual indexes $i \in X$ and $j \in Y$ such that $(i \triangle j) \prec x$. Intuitively, a splitting ordering encodes the restriction that β-formulas should be expanded before ϕ- or $\overline{\phi}$-formulas (in a variable pure setting). The last thing to do is to take into account the new splitting ordering in the characterization of biRG-validity of Definition 10, which is done by redefining the reduction ordering so that $\lhd = (\ll \cup \sqsubset \cup \prec)^+$. The sets $\{c\}$ and $\{b\}$ are splitting sets for the derivation given previously. Accordingly, the two initial sequents can now give rise to two distinct colored substitutions $\sigma_1 = \{x^{\{c\}}/c\}$ and $\sigma_2 = \{x^{\{b\}}/b\}$ from which we get $(b \triangle c) = 5$, $5 \prec x$, $b \sqsubset x$ and $c \sqsubset x$. The induced reduction ordering $\lhd = (\ll \cup \sqsubset \cup \prec)^+$ is irreflexive.

References

1. R. Antonsen and A. Waaler. A labelled system for IPL with variable splitting. In *21st Int. Conference on Automated Deduction, CADE-21, LNAI 4603*, pages 132–146, Bremen, Germany, July 2007. Springer Verlag.
2. T. Crolard. Substractive logic. *Theoretical Computer Science*, 254(1-2):151–185, 2001.
3. T. Crolard. A formulae-as-types interpretation of substractive logic. *Journal of Logic and Computation*, 14(4):529–570, 2004.
4. D. Galmiche and D. Méry. Characterizing provability in BI's pointer logic through resource graphs. In *Int. Conference on Logic for Programming, Artificial Intelligence, and Reasoning, LPAR 2005, LNAI 3835*, pages 459–473, Montego Bay, Jamaica, December 2005. Springer Verlag.
5. D. Galmiche and D. Méry. Resource graphs and countermodels in resource logics. *Electronic Notes in Theoretical Computer Science*, 125(3):117–135, 2005.
6. R. Goré, L. Postniece, and A. Tiu. Cut-elimination and proof-search for Bi-intuitionistic logic using nested sequents. In *Advances in Modal Logic 7*, pages 43–66, 2008. College Publications, London.
7. S. Negri. Proof analysis in modal logic. *J. of Philos. Logic*, 34(5-6):507–554, 2005.
8. J. Otten and C. Kreitz. T-string-unification: unifying prefixes in non classical proof methods. In *5th Int. Workshop on Analytic Tableaux and Related Methods, TABLEAUX'96, LNAI 1071*, pages 244–260, Terrasini, Palermo, Italy, 1996. Springer Verlag.
9. L. Pinto and T. Uustalu. Proof search and counter-model construction for Bi-intuitionistic propositional logic with labelled sequents. In *Int. Conference on Analytic Tableaux and Related Methods, TABLEAUX 2009, LNAI 5607*, pages 295–309, Oslo, Norway, 2009. Springer Verlag.
10. L. Postniece. Deep inference in Bi-intuitionistic logic. In *Int Workshop on Logic, Language, Information and Computation, WoLLIC 2009, LNAI 5514*, pages 320–334, Tokyo, Japan, 2009. Springer Verlag.
11. C. Rauszer. An algebraic and Kripke-style approach to a certain extension of intuitionistic logic. *Dissertationes Mathematicae*, 168, 1980.